Io/IoLA/IoLD Control Panel

Version 1.2
Includes Firmware Versions 24.28 (Io), 5.8 (IoLA), and 4.5 (IoLD)

Firmware Update Contents

This software release provides updated firmware and Io Control Panel application software. Documentation on the control panel is also included in this document.

New Features

As of this release the Io/IoLD/IoLD Control Panel is now a universal binary—it works on non-Intel Macs and MacPro and MacBook Pro Intel macs.



To install the firmware

1. Ensure your Io/IoLA/IoLD is connected to the Mac and powered ON.
2. Download the Io Control Panel from our webserver's Io support page, if you haven't already done so: (http://www.aja.com/support_Io.html).
3. The file downloaded is a ".zip" archive. Double-click it to expand the archive.
4. After double-clicking, you will find a new folder on your Mac desktop.
5. Inside the folder you will find the new Io Control Panel application and supporting files.
6. Double-click the Control Panel application to run it.
7. When run, the application will determine whether the attached Io device is up-to-date with its firmware or whether new firmware is needed. If needed, it will prompt you that the "Io Firmware needs to be updated". Click the "Update Io Firmware" button at the bottom of the screen if you see this prompt (see sample screen that follows). If you don't see this prompt, then your firmware is current with the Control Panel application and you can skip the rest of this procedure.

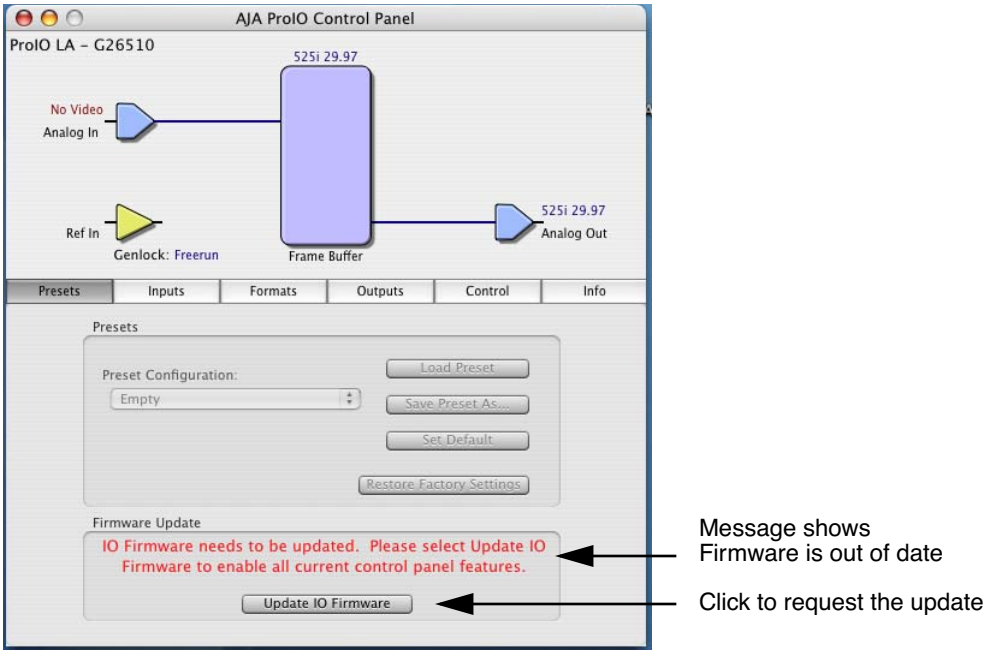

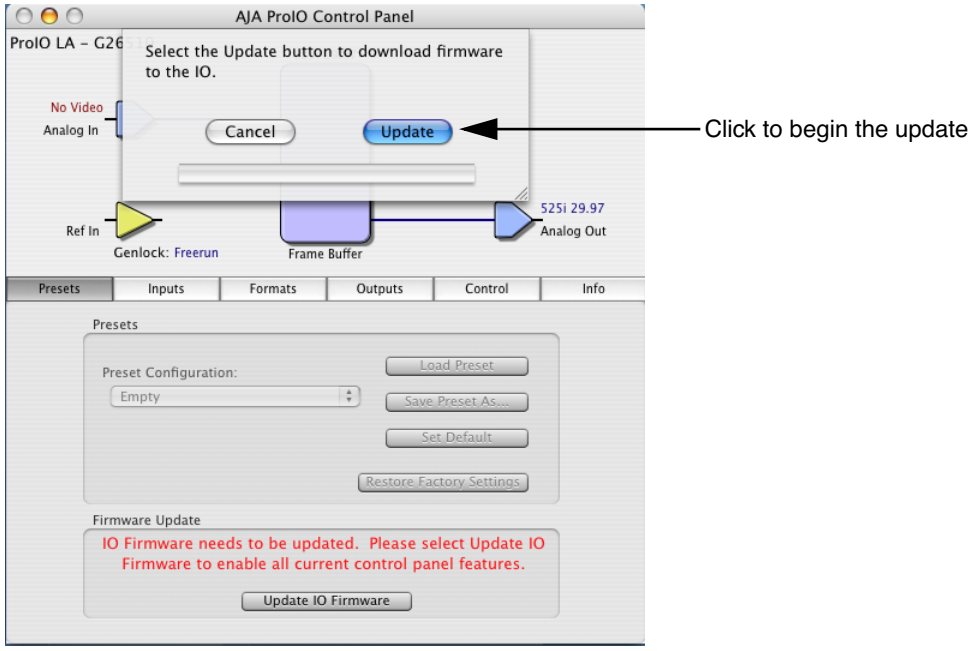

8. Do not turn power OFF to the Io system while the application is updating the firmware. Follow the instructions provided by the application and wait until the update completes before disconnecting power from Io or powering it down.

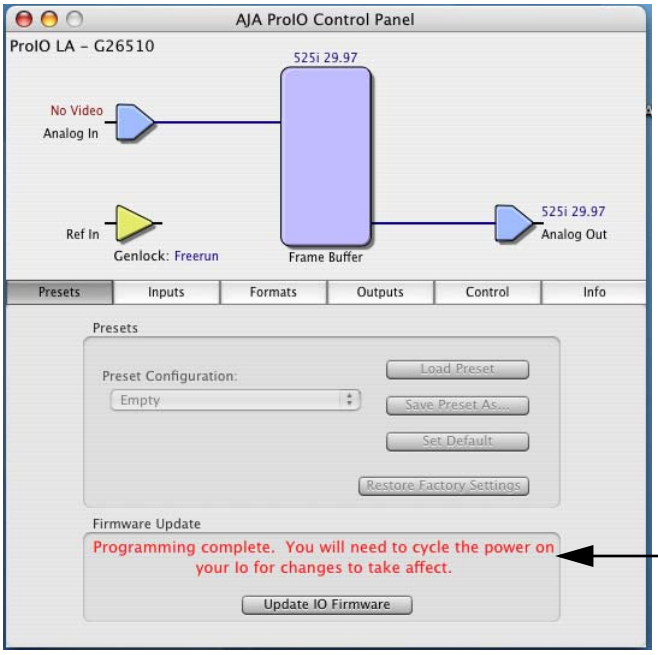

Message shows Firmware has been updated. Remove AC Power and then replace it for the firmware changes to take effect.

9. After updating, ensure the Io/IoLA/IoLD works properly by capturing and then playing back some test source material.

Io Control Panel Operation

All Io Products

The Io Control Panel application is generally intended for stand-alone control of an Io, IoLA or IoLD. Although it can be run at the same time as other applications (Final Cut Pro, After Effects, Motion, Combustion, etc.), it primarily is used for direct control of the Io device. The following characteristics apply when running the Io Control Panel:

- When clicking out of the Io Control Panel to another application, it becomes inactive (you'll notice a color change).
- If the Control Panel is open and Final Cut is launched, the Control Panel will become inactive and Final Cut will overwrite the presets currently used by the Control Panel—except those that Final Cut can't control (i.e., the Proc Amp controls, Genlock settings, etc.). Any settings that both applications can control will be controlled by Final Cut. To go back to Io Control Panel operation of the Io, you'll have to quit Final Cut and reload the Control Panel preset into the Io device.
- As mentioned previously, the Proc Amp controls in the Io Control Panel aren't controlled by Final Cut, so you can adjust them in the Control Panel, launch Final Cut, and then have those setting in effect for your Final Cut session. This is a powerful feature that adds a lot of artistic control to Final Cut. However, it also allows you to create video levels that are outside normal video standards, so some care should be exercised.
- Unlike the KONA Control Panel, the Io Control Panel does not show the video format of incoming video (there is no "auto-detection" performed).

Operational Notes

The Io Control Panel is an application that allows the user to control the AJA Io, Io LA, and IO LD without launching FCP. This allows you to use Io as a standalone converter. Using the Io Control Panel application, you can set any of the following:

- Video input
- Video format
- Video resolution
- Proc Amp settings
- Audio input
- Analog video output format
- Audio output
- Genlock mode
- Saving and loading of presets
- Default power up mode

Presets Pane

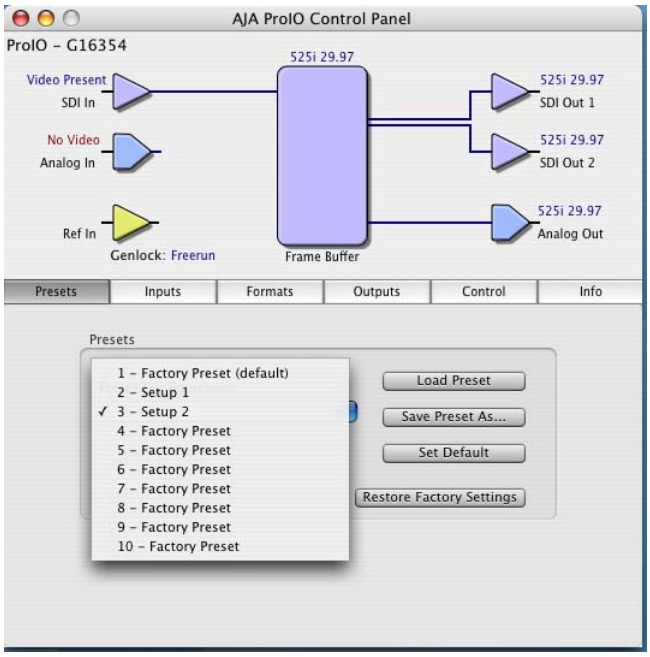

Presets Tabbed Window Pane, Io Control Panel

This is where you save and load Presets-configurations that you have defined.

There is a pulldown menu that lets you choose from a list of Presets.

Load Preset loads the Preset currently shown in the Preset Configuration pulldown list.

Save Preset As... saves the current state of the Control Panel settings (inputs, proc amp setting, formats, etc.) to the currently shown Preset Configuration while allowing you to give it a new name.

Set Default sets the currently shown Preset Configuration as the new default. This is the state that Io will wake up in when power is applied.

Restore Factory Settings loads the original AJA factory settings into the current preset (it will show "(default)" in the preset name.

A checkmark shows the preset that is currently active.

Inputs Pane

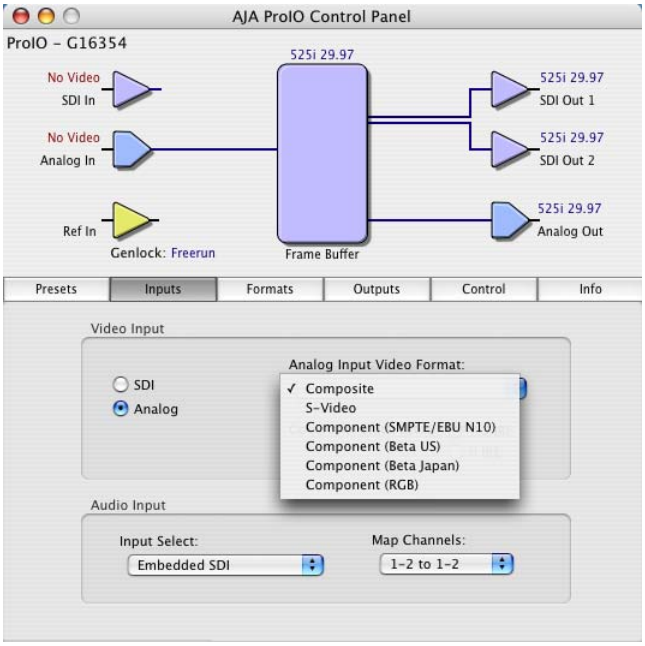

Inputs Tabbed Window Pane, Io Control Panel

Video Input:
Choose SDI or Analog inputs to be active. If Analog input is selected the Analog Input Video Format pulldown allows you to choose which analog input is active, Composite, S-Video, Component SMPTE, Beta, or RGB. Additionally there is a radio button to choose the setup level for the Composite input. The Input Passthru checkbox puts Io in EE mode.

Audio Input:
Here is where you select the active Audio input. Your choices are:

Embedded SDI, ADAT, SPDIF, AES/EBU, or Analog. When Embedded SDI is chosen, you can also select how the embedded SDI audio channels are mapped to a stereo pair using the pulldown located on the right side of the *Input Select*.

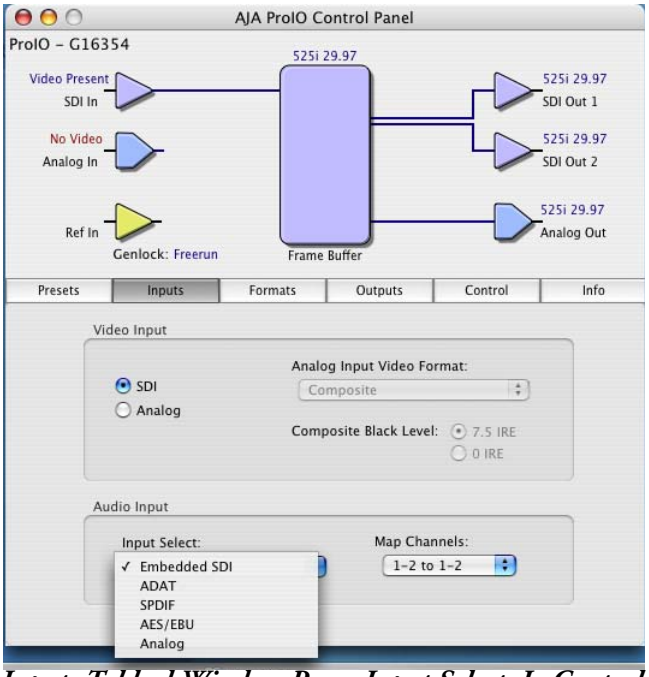

Inputs Tabbed Window Pane, Input Select, Io Control Panel

Formats Pane

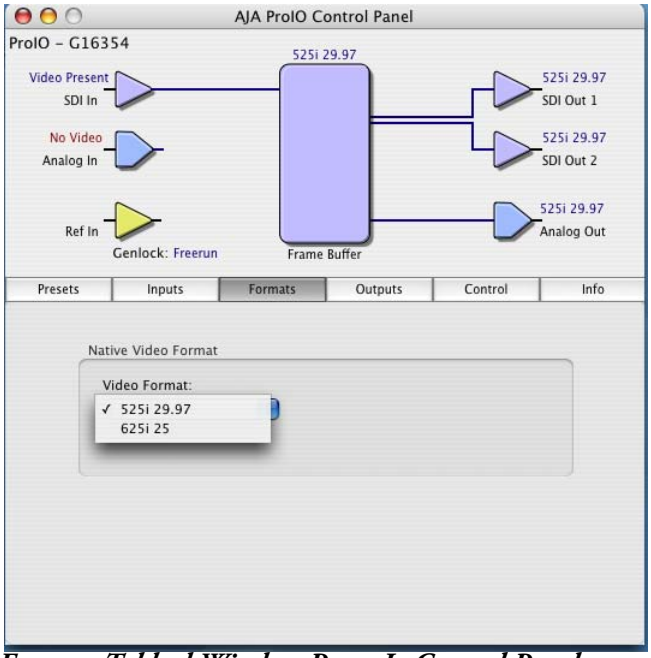

Formats Tabbed Window Pane, Io Control Panel

Native Video Format:
Here is where you choose your Video Format, either 525 or 625. You also can choose the Video resolution to be 8 or 10 bit.

Outputs Pane

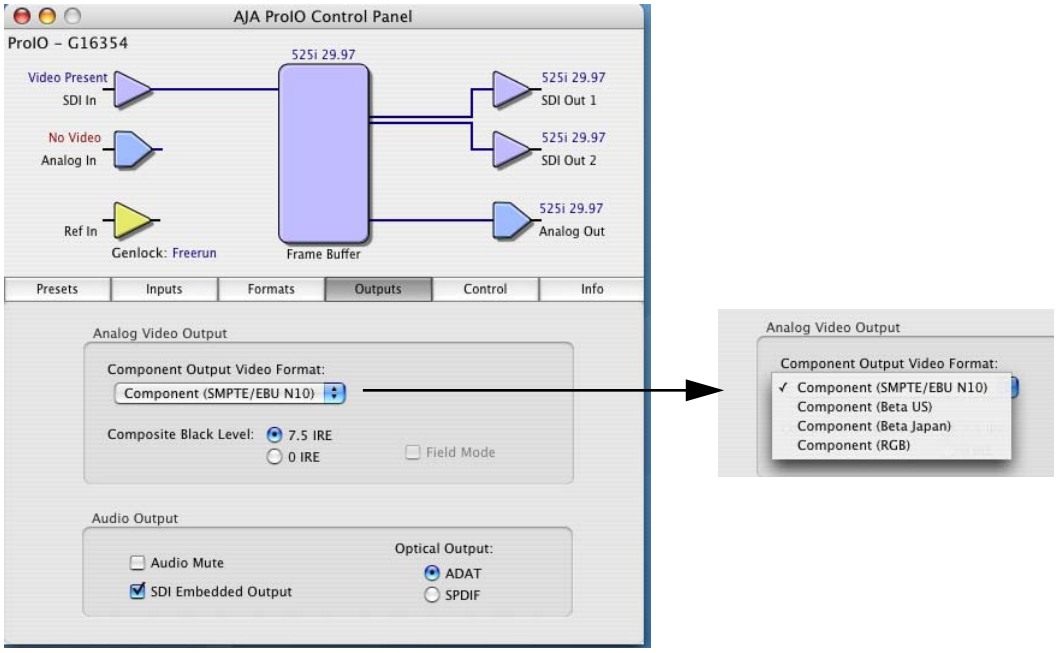

Outputs Tabbed Window Pane, Io Control Panel

Analog Video Output:
This is where you set the component Output Video Format as either SMPTE, Beta, or RGB. You can also set the Composite Video Output Black Level.

Audio Output:
Allows you to set the format for the Optical output as either ADAT, or SPDIF. Additionally you can mute the output audio and disable Embedded Audio in the SDI output.

Control Pane

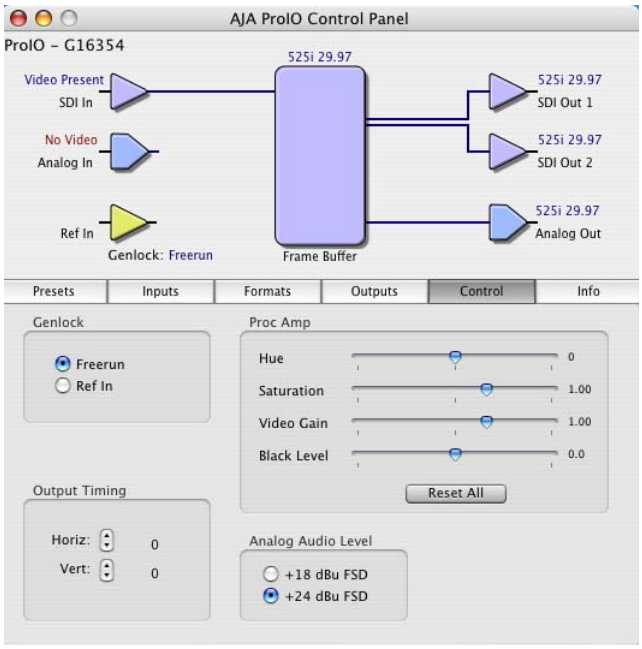

Control Tabbed Window Pane, Io Control Panel

Genlock:
This is where you set the Genlock source for Io. Your choices are *Freerun*, or sync to *Ref In*.

Freerun: in this mode, Io generates sync without an external reference source
Ref In: directs Io to use the Ref Video source for sync (usually an analog black burst video signal)

Output Timing:
These two pull-downs allow output timing adjustment with reference to the Ref Video source selected. The Horizontal reference can be adjusted by selecting a number of pixels (clocks) to offset. Vertical can be adjusted by specifying a number of lines to offset.

Proc Amp:
The settings affect the proc amplifier built into the Io. Each of the four sliders controls a video parameter, with the middle being close to unity (Saturation and Video Gain unity settings are normally just to the right of center due to the scale used). Clicking the Reset All button sets all four sliders back to unity. To set a single slider back to unity, hold the Option key down (mac keyboard) and click somewhere on a desired slider.

Sliders:

- Hue: sets the color hue -180 to +180.
- Saturation: selects a value between black and white and 1 1/2 chroma.
- Video Gain: selects a value between black and 1 1/2 times luma.
- Black Level: sets black level.

Analog Audio Level:
Sets the full scale audio level between consumer and professional levels.

Info Pane

This information pane shows you the currently loaded versions of Io Firmware, QuickTime components, Extensions, and Plugins. Additionally you can see if there are any conflicting QuickTime components installed on your system.

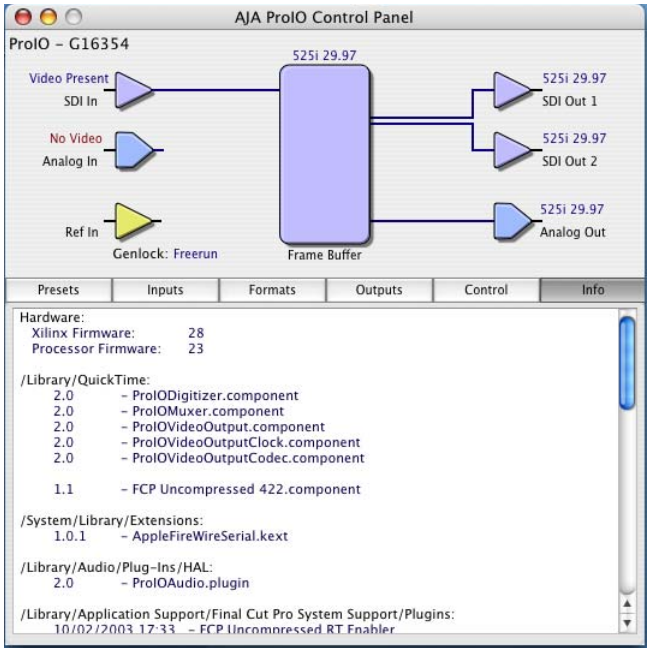

Info Tabbed Window Pane, Io Control Panel